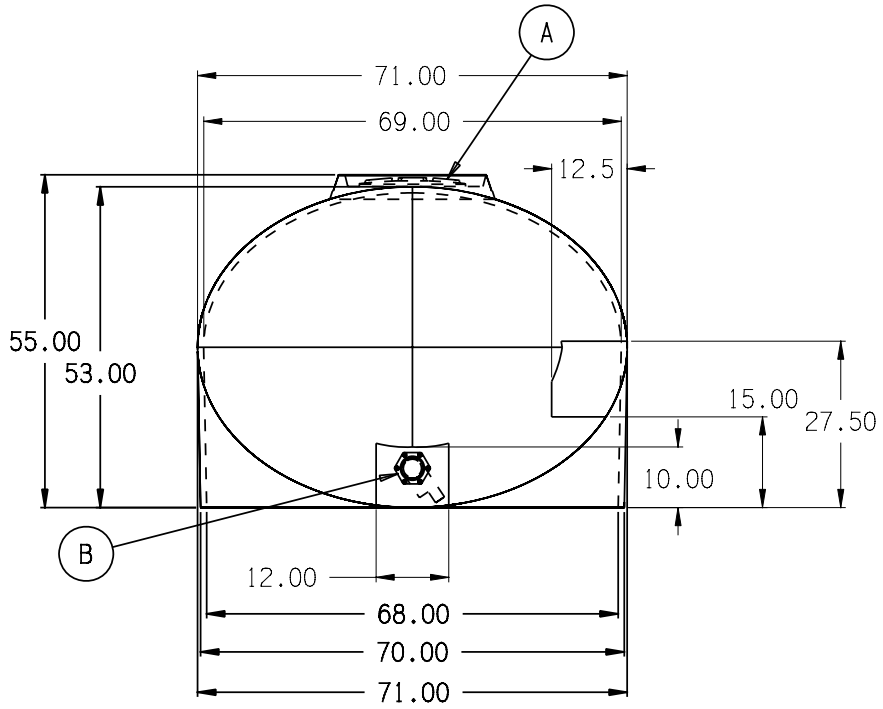

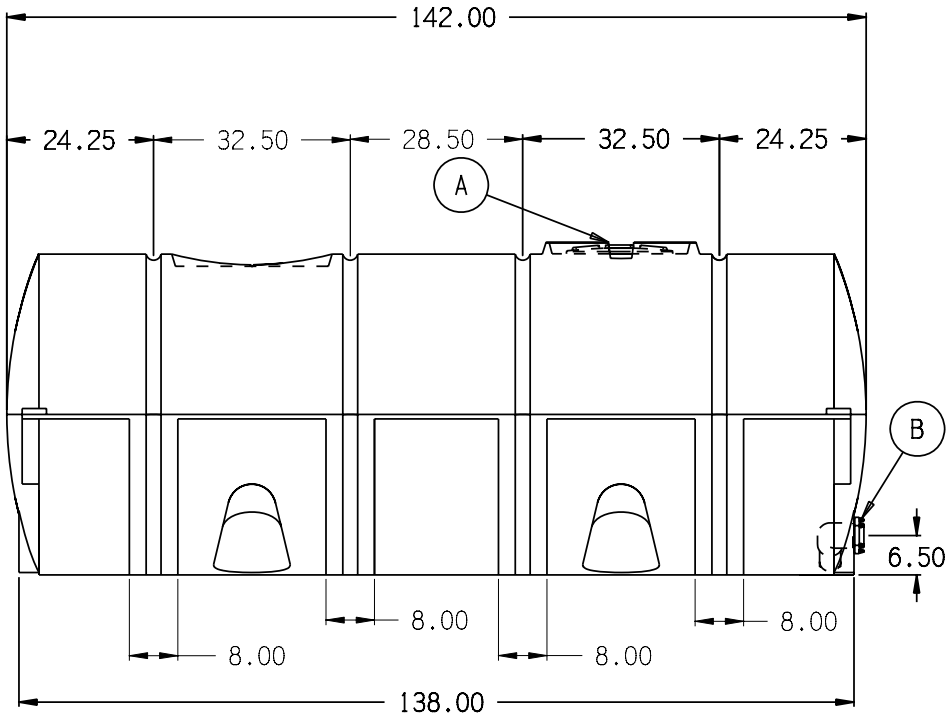

STANDARD OUTLET SPECIFICATION * K *

A. 18" PE THREADED-VENTED MANWAY W/15" ACCESS [P/N 34700087].
B. 3" PP DBL FLANGED BOLTED FTG SHORT SIPHON TUBE ASSY W/EPDM GASKET & SS BOLTS [P/N 34700844].

(all dimensions in inches)

BASE FITTINGS TO BE LEFT INSTALLED AT TIME OF SHIPMENT PER SII PROCEDURE

PART # TANK: 1000700C-- (M)

1650 GALLON ELLIPTICAL LEG TANK

REF#: 00000 02/06/06

SNYDER INDUSTRIES INC.